PRODUCT SHEET

Description:
Table Catch "Spring" , Steel-YZP, 44x16 x1mm, W/Spring Function. Incl. Striker

Item number:
24.03.042-0

Units	Box	Carton	HS Code	Barcode
Set	100	1000	8302420090	5704866483919

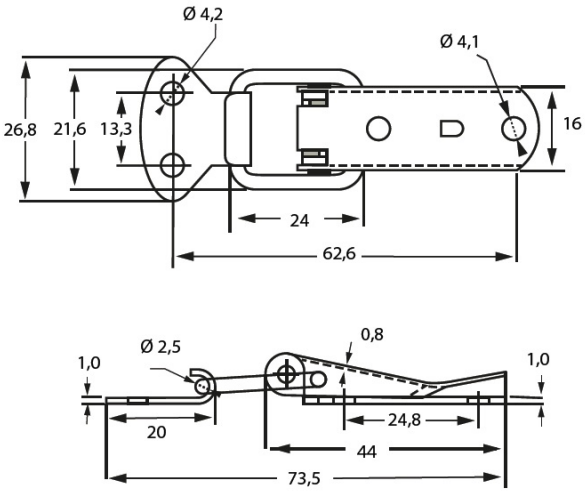

SISO A/S
Mileparken 11
DK-2740 Skovlunde
Denmark
VAT: DK 24786013

Phone +45 45 830 900

www.siso.dk
siso@siso.dk

Danske Bank
Nytorv Branch
Copenhagen
SWIFT: DABADKKK

Account no.
4180 3112 112936
IBAN Account
DK7230003112112936